Heritage Products Sales@heritagepro.com (866) 839-1866

REVISIONS				
ZONE	REV	DESCRIPTION	DATE	APPROVED
	B	REDRAWN	14AUG97	

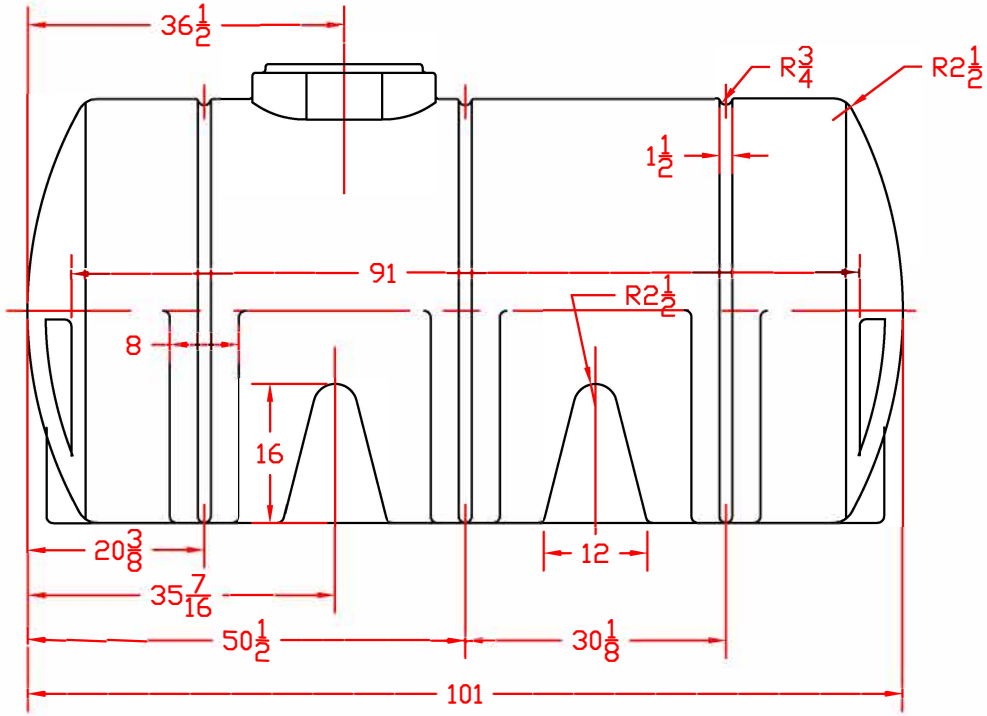

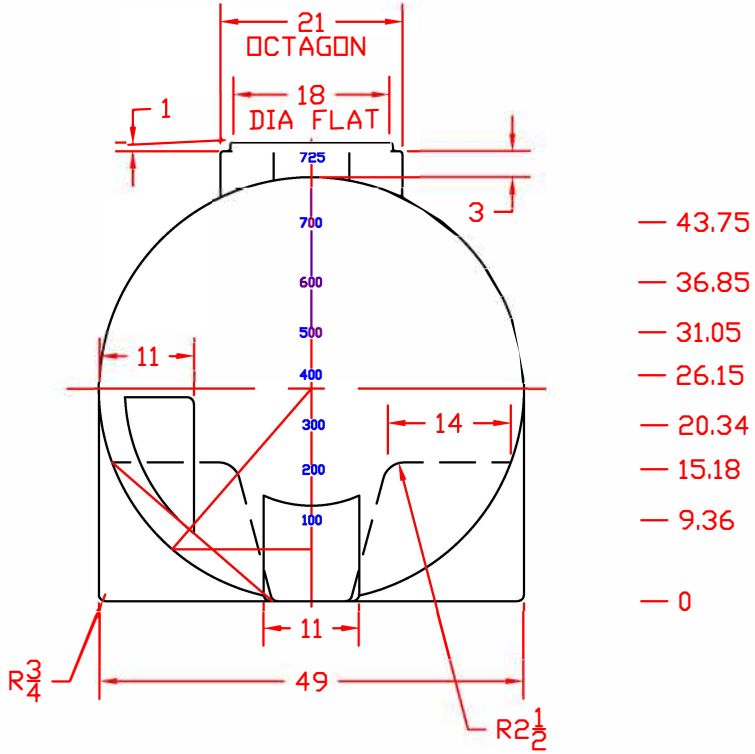

GALLON MARKS BOTH ENDS

JTP 14AUG97	725 GALLON HORIZONTAL LEG TANK			
	SIZE B	FSCM NO.	HPTC-40180LC-NW	REV B
	SCALE 1/16			SHEET