Heritage Products Sales@heritagepro.com (866) 839-1866

REVISIONS				
ZONE	REV	DESCRIPTION	DATE	APPROVED
	D	SPARGER FLATS REV'D.	17AUG04	
	E	BAFFLES MODIFIED	11OCT11	

REVISIONS				
ZONE	REV	DESCRIPTION	DATE	APPROVED
	B	REDDRAWN	14AUG97	
	C	DIMS MATCHED TO PROD	23OCT01	
		WAS 1)32, 2)21,		
		3)129-1/4, 4)131, 5)134		

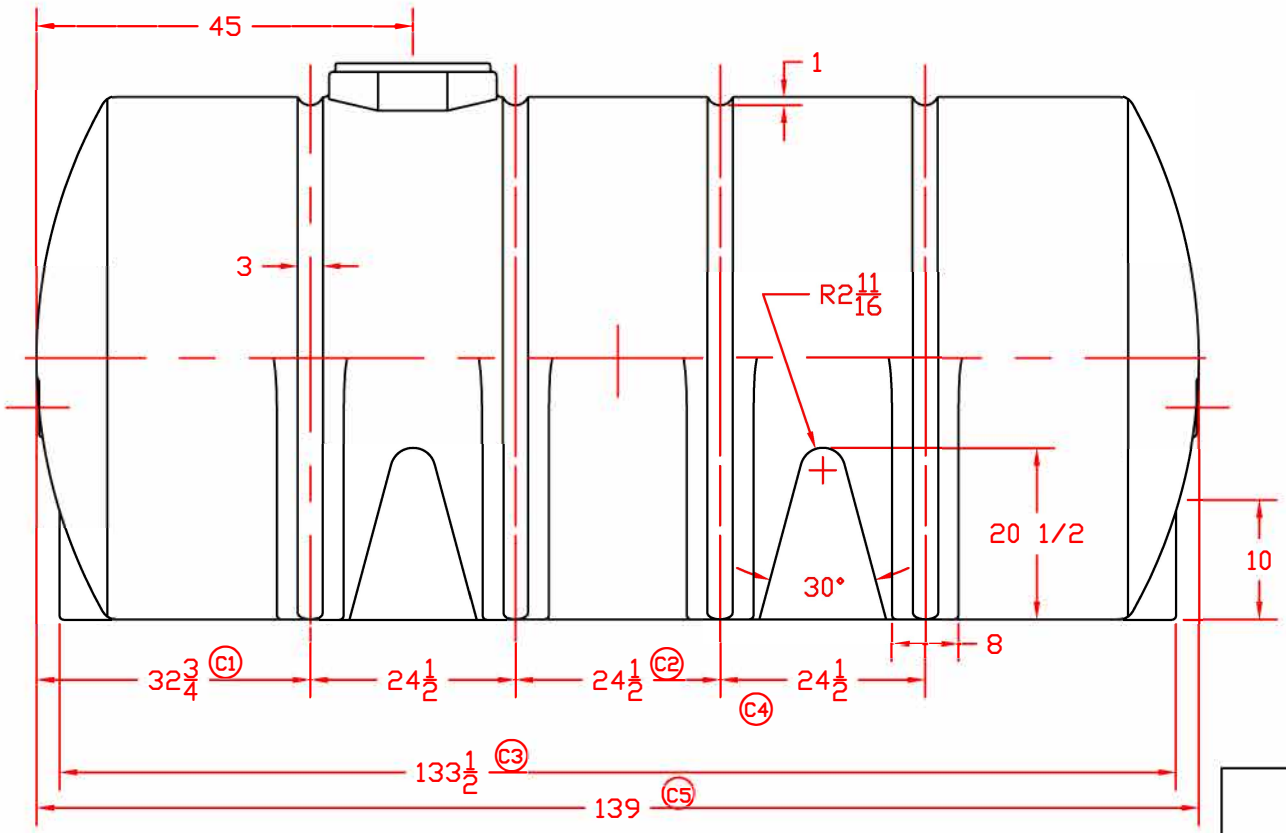

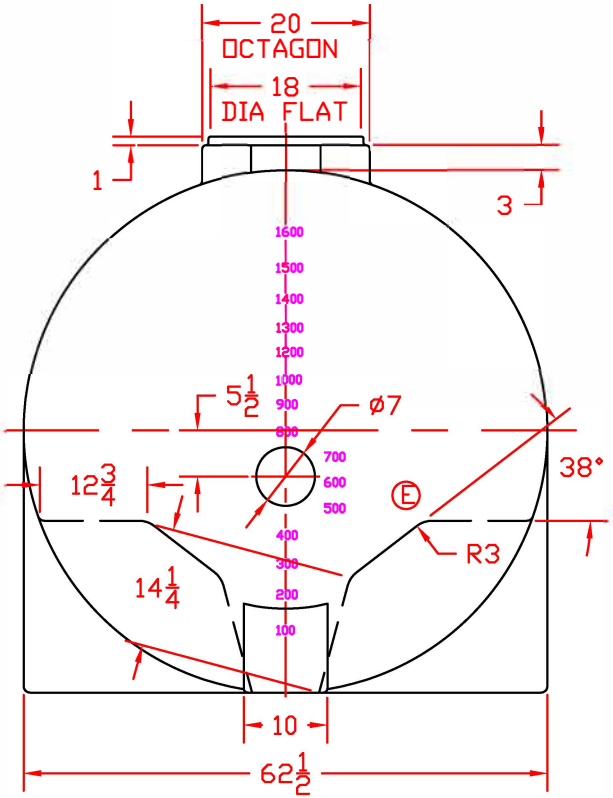

1625 GALLON HORIZONTAL LEG TANK

JTP 14AUG97	SIZE B	FSCM NO.	HPTC-40133LC-NW	REV E
	SCALE 1/16		SHEET	