Heritage Products Sales@heritagepro.com (866) 839-1866

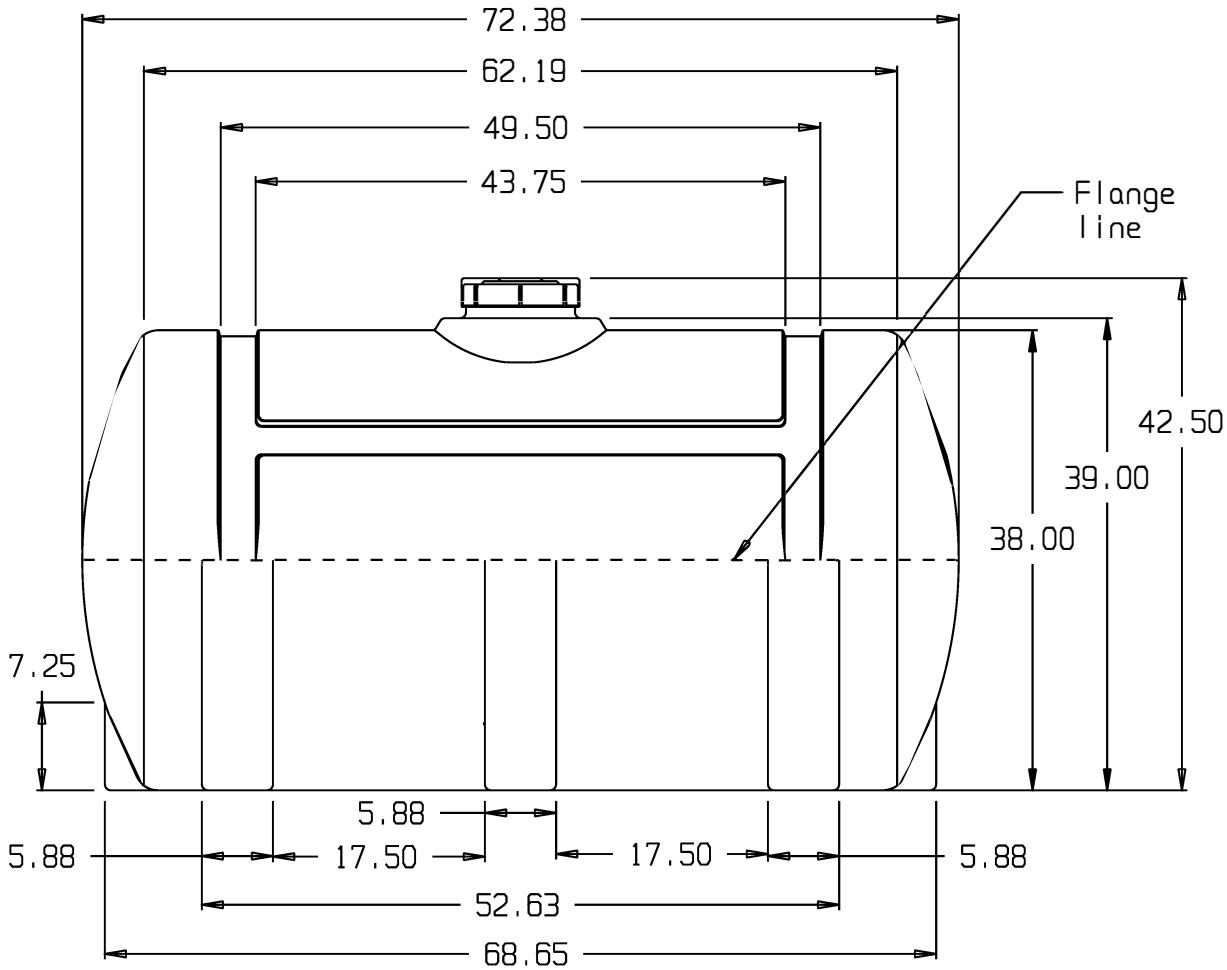

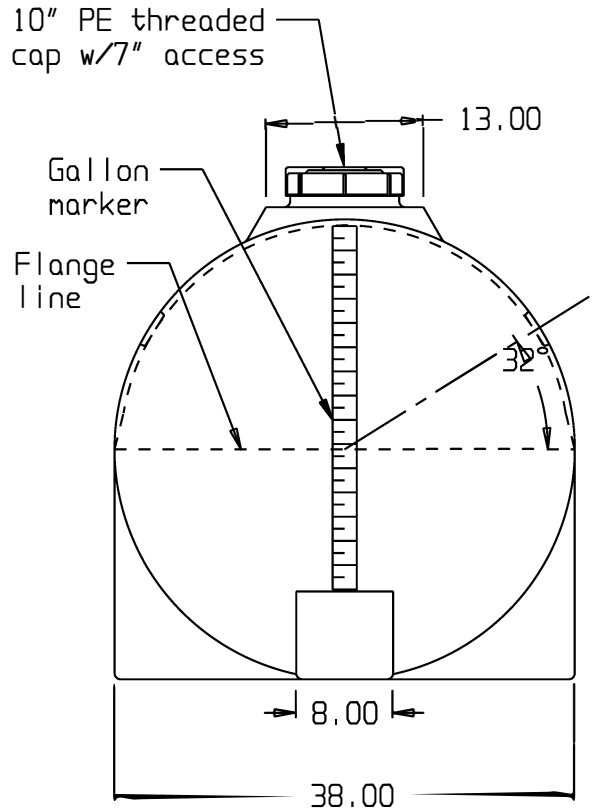

SNYDER INC

* BASE FITTINGS TO BE LEFT INSTALLED AT TIME OF SHIPMENT PER SII PROCEDURE
* Consult Snyder's Guidelines for Use and Installation prior to delivery. Available on-line at www.snydernet.com

(all dimensions in inches)

300 GALLON HORIZONTAL LEG TANK

HPTC-13200LC-SI