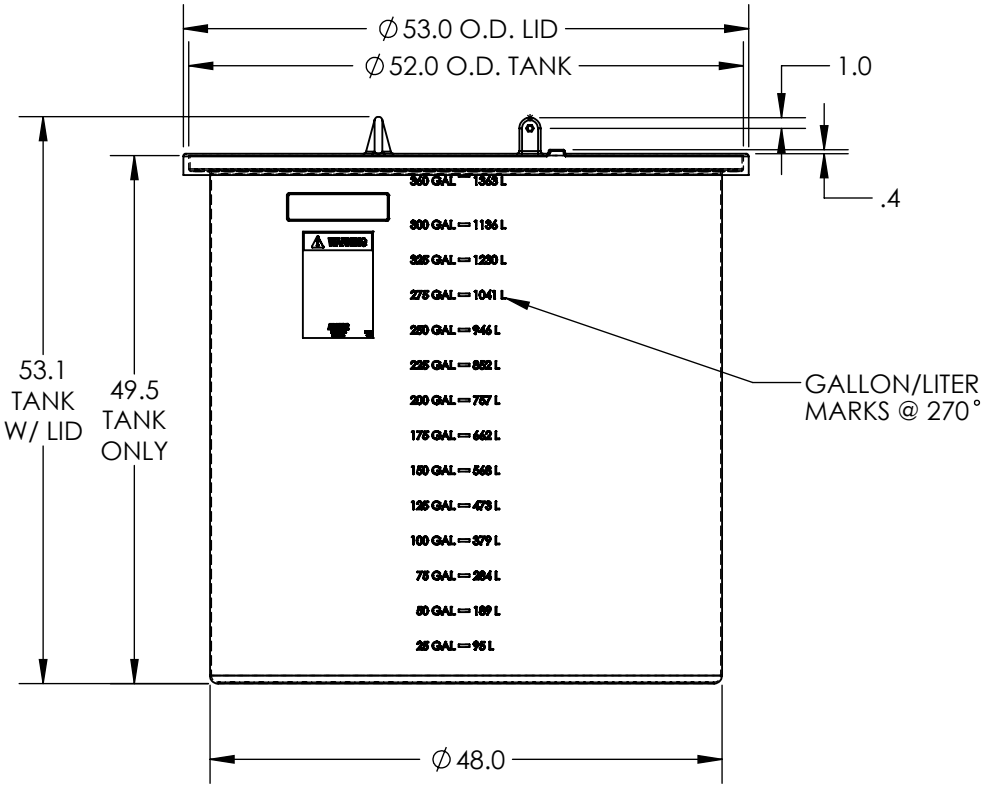

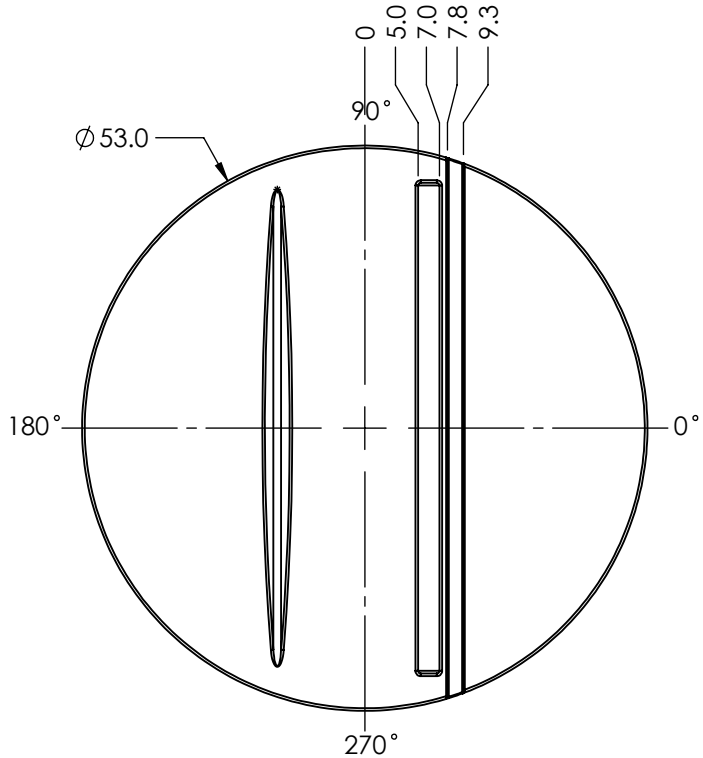

NOTE:
TANK CAN BE SOLD WITH OPTIONAL STAND. **TANK WITH STAND DRAWING**
GALLON MARKS CAN BE REMOVED FOR FITTING PLACEMENT AS NEEDED.

	TANK STYLE	TANK P/N	LID DRAWING
STANDARD	VOT	5760000N___00	SHOWN
OPTIONAL	BLTD	5760000N___98	D002817
OPTIONAL	HNGD	5760000N___99	D002830

*ALL EXTERNAL PIPING MUST BE INDEPENDENTLY SUPPORTED.
*ONLY BASE FITTINGS TO BE LEFT INSTALLED AT TIME OF SHIPMENT PER SII PROCEDURE.
*Consult Snyder's Guidelines for Use and Installation prior to delivery.
Available on-line at

ALL DIMENSIONS ARE IN INCHES, NOMINAL, & SUBJECT TO CHANGE WITHOUT NOTICE.
ALL DIMENSIONS ON ROTATIONAL MOLDED PARTS ARE SUBJECT TO A ± 3% TOLERANCE.

DO NOT SCALE	DRAWN BY	DATE	TITLE:	REVISION
STATUS: Released	IGG	10/06/2014	ASM TK 360VFOT X 48	A
HPTC-57600AA-SI			PART NO. 5760000N	SHEET 1 OF 1
			ENG. ID. D002979	