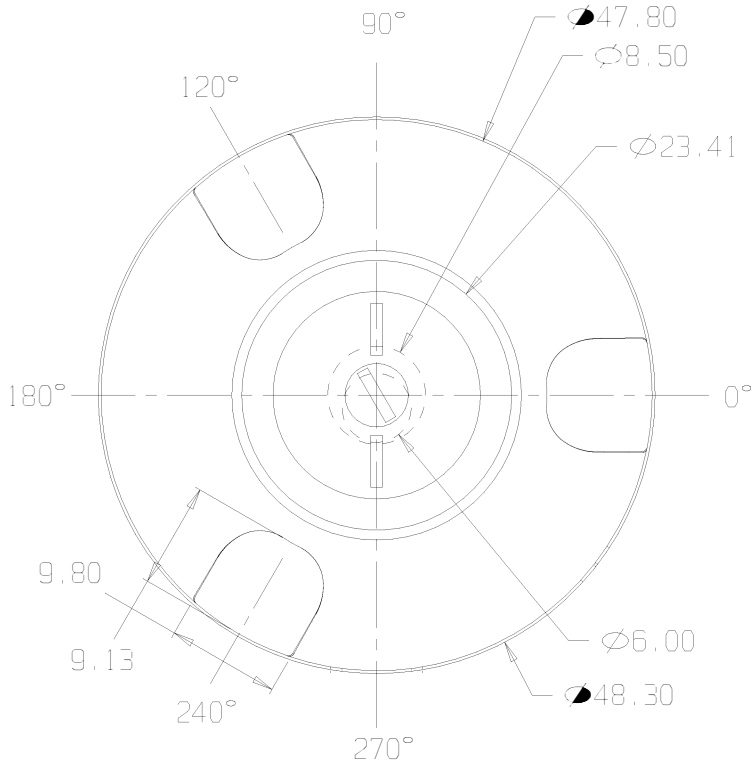

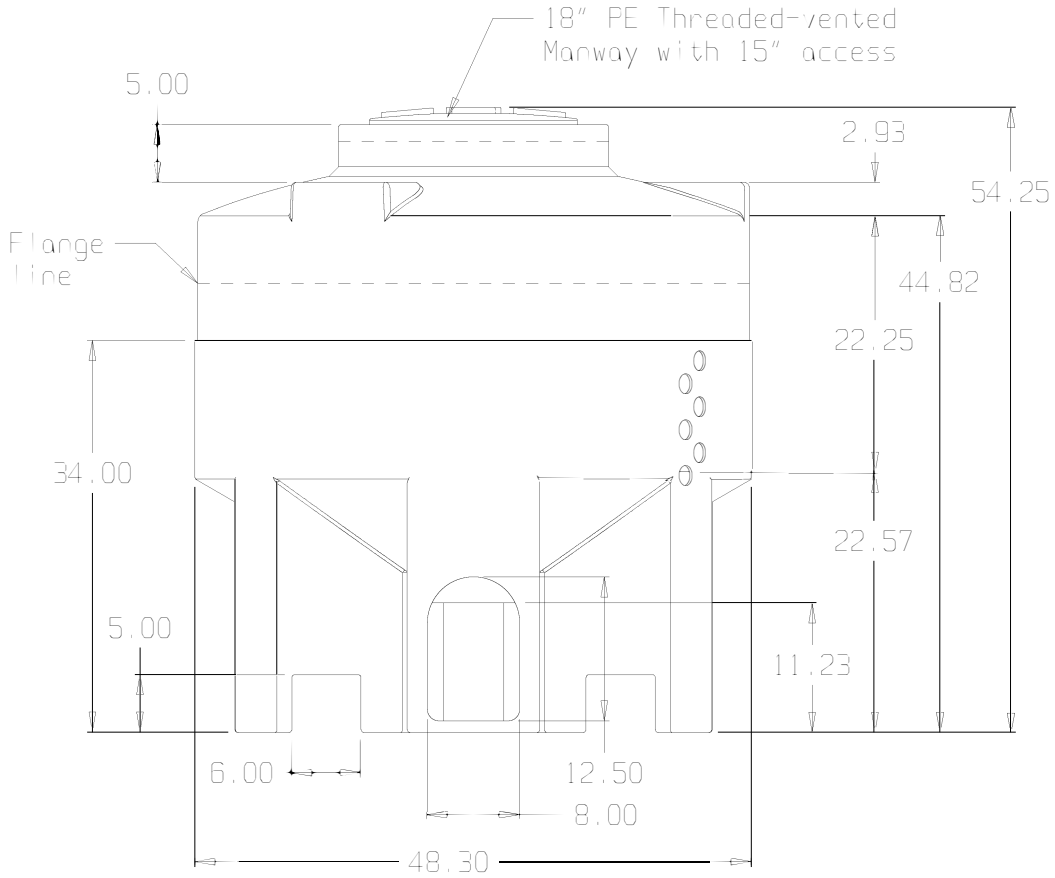

(all dimensions in inches)

BASE FITTINGS TO BE LEFT INSTALLED AT TIME OF SHIPMENT PER SII PROCEDURE

225 GALLON 30° CONE BOTTOM TANK W/STAND

PART # TANK:

HPTC-15604JP-SI