Heritage Products Sales@heritagepro.com (866) 839-1866

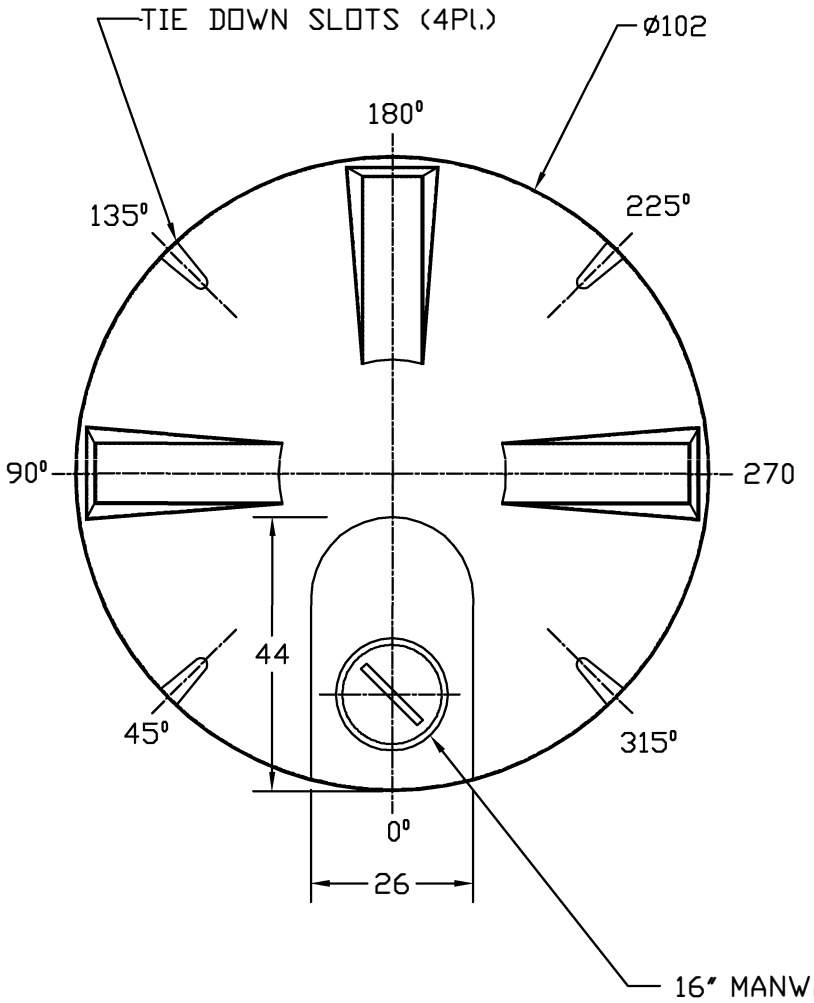

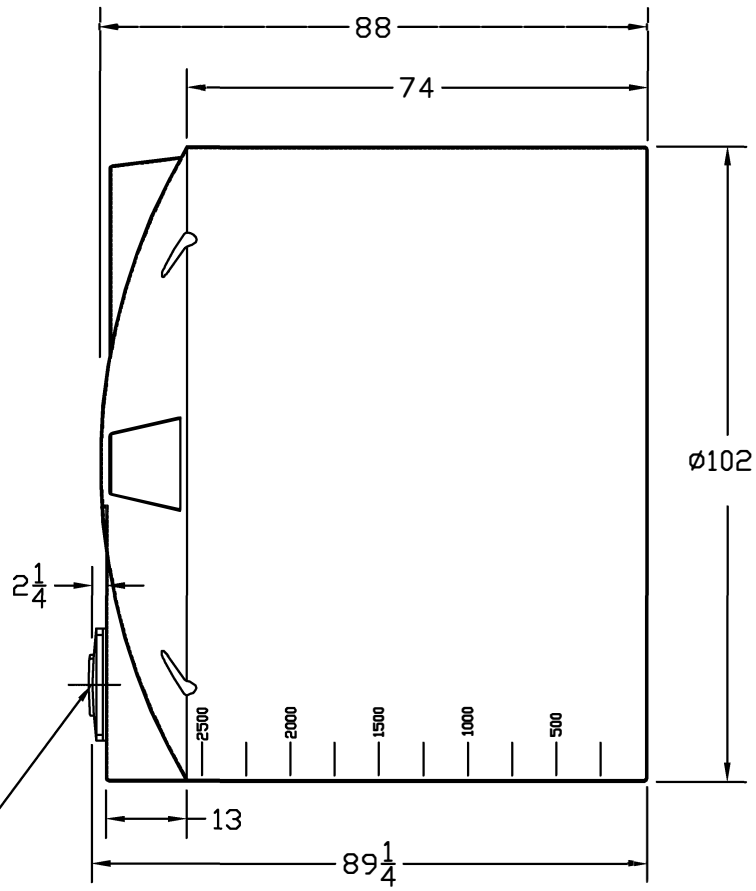

ALL DIMENSIONS SHOWN ARE OUTSIDE PART DIMENSIONS IN INCHES,AND VARY BY THE STANDARD ROTATIONAL MOLDING TOLERANCE OF 2% TO 3%.

THIS DRA WING & DESIGN IS THE PROPERTY OF INDUSTRIES INC. IT MAY NOT BE USED FOR ANY PURPOSE OTHER THAN BY THE OWNER.

CHEM-TAINER IND. DOES NOT AUTHORIZE THE REPRODUCTION ON CONVEYANCE OF ANY INFORMATION CONTAINED HEREIN.

Rev. A	Date 6/8/11	File Name	
		Date 05/28/2011	Mold Location CA.
		Drawn By: Jim B.	Cust. Rep.
TITLE 2700 GALLON VERTICAL BULK STORAGE TANK			
HPTC-2700W-CT		Dwg. # C-2700-15	